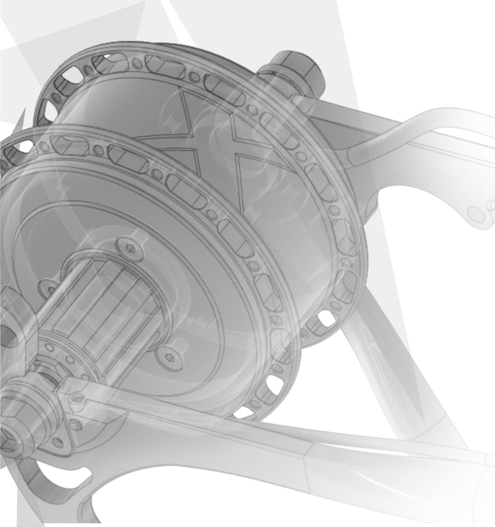

ebikemotion®

The B2B Connected Bicycle Platform

Quick Use Guide

Care & Maintenance
X35 System

ebm bikes

EBIKEMOTION TECHNOLOGIES S. L.
C/ Orfebres, 10 - 34004
(Palencia, Spain)

ebikemotion.com

EBMDOC13-A1

V.1.0

1 AUX & LIGHTS / ACCESORIOS Y LUCES / AUX UND LICHT / ACCESSOIRES ET LUMIÈRES / ACCESSORI E LUCI / ACESSÓRIOS E LUZES

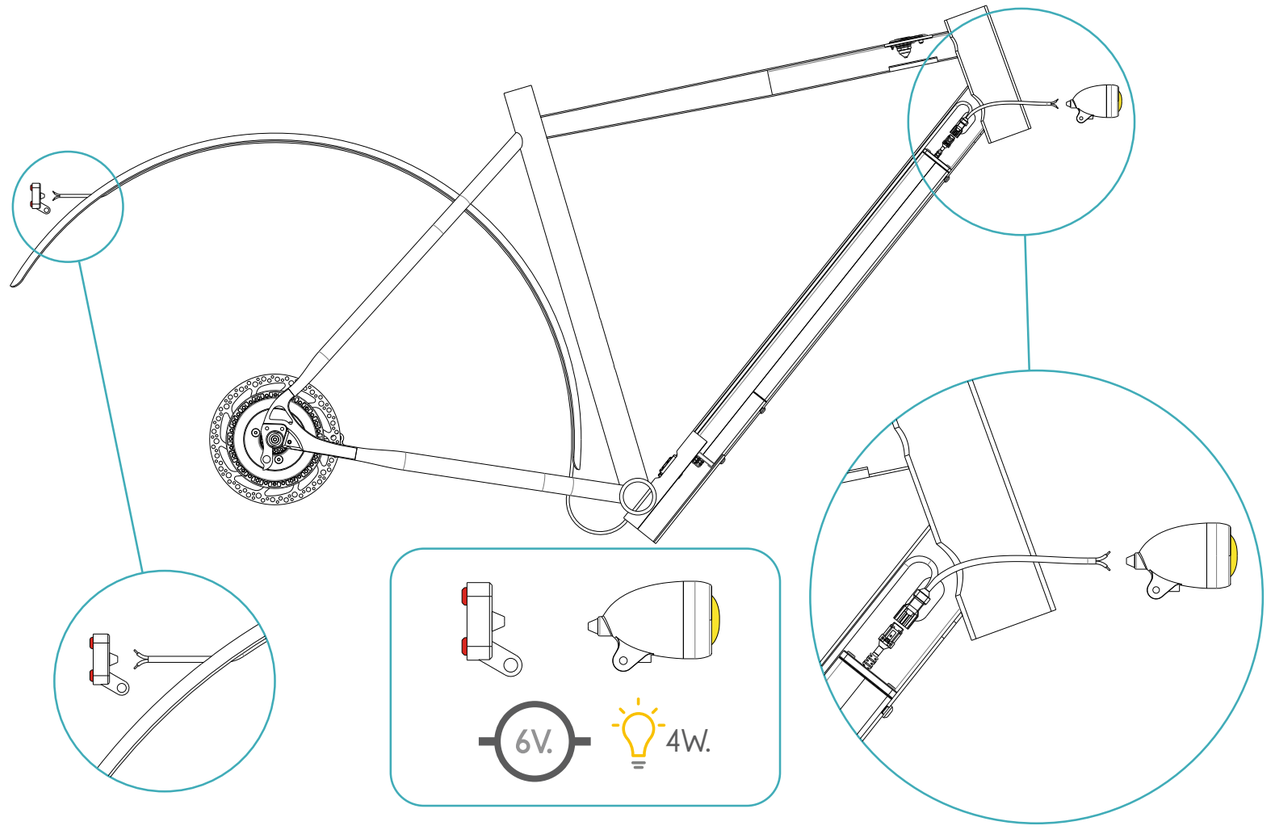

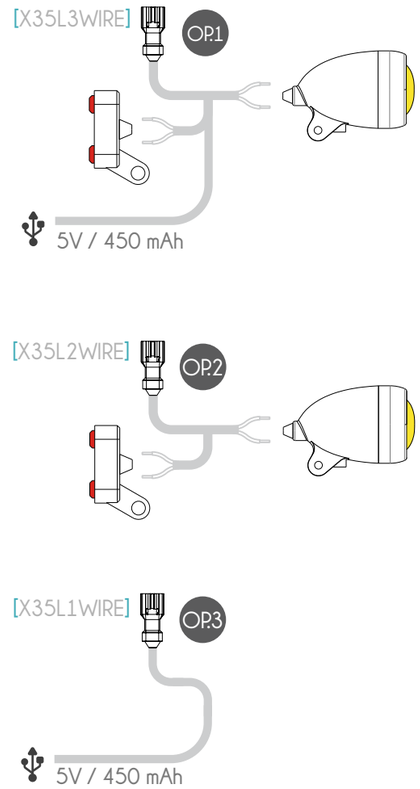

2 BATTERY, WIRES & CHARGER / BATERIA, CABLEADO Y CARGADOR / BATTERIE, KABEL UND LADEGERÄT / BATTERIE ET CHARGEUR / BATTERIA, CAVI E CARICABATTERIA / BATERIA, CABOS E CARREGADOR

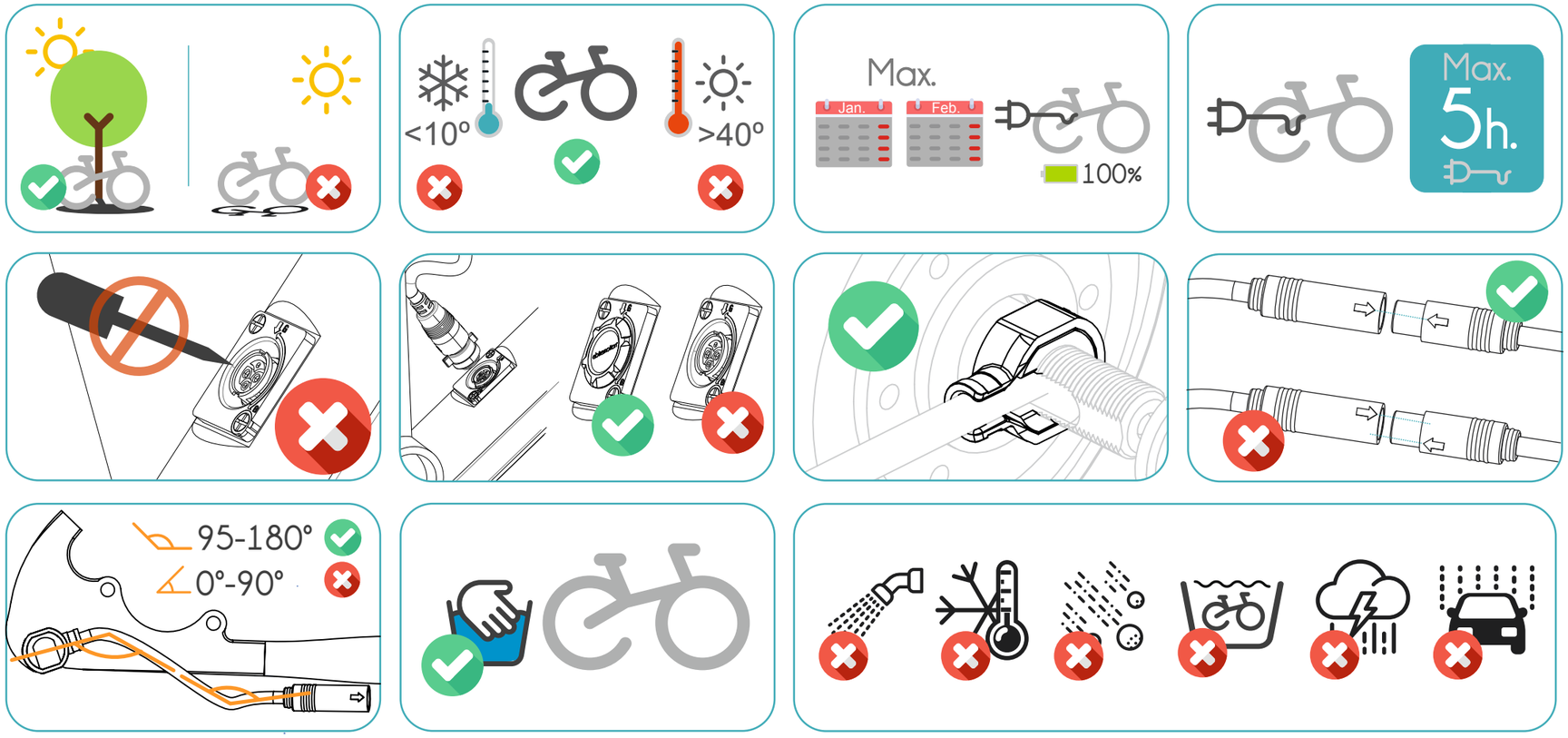

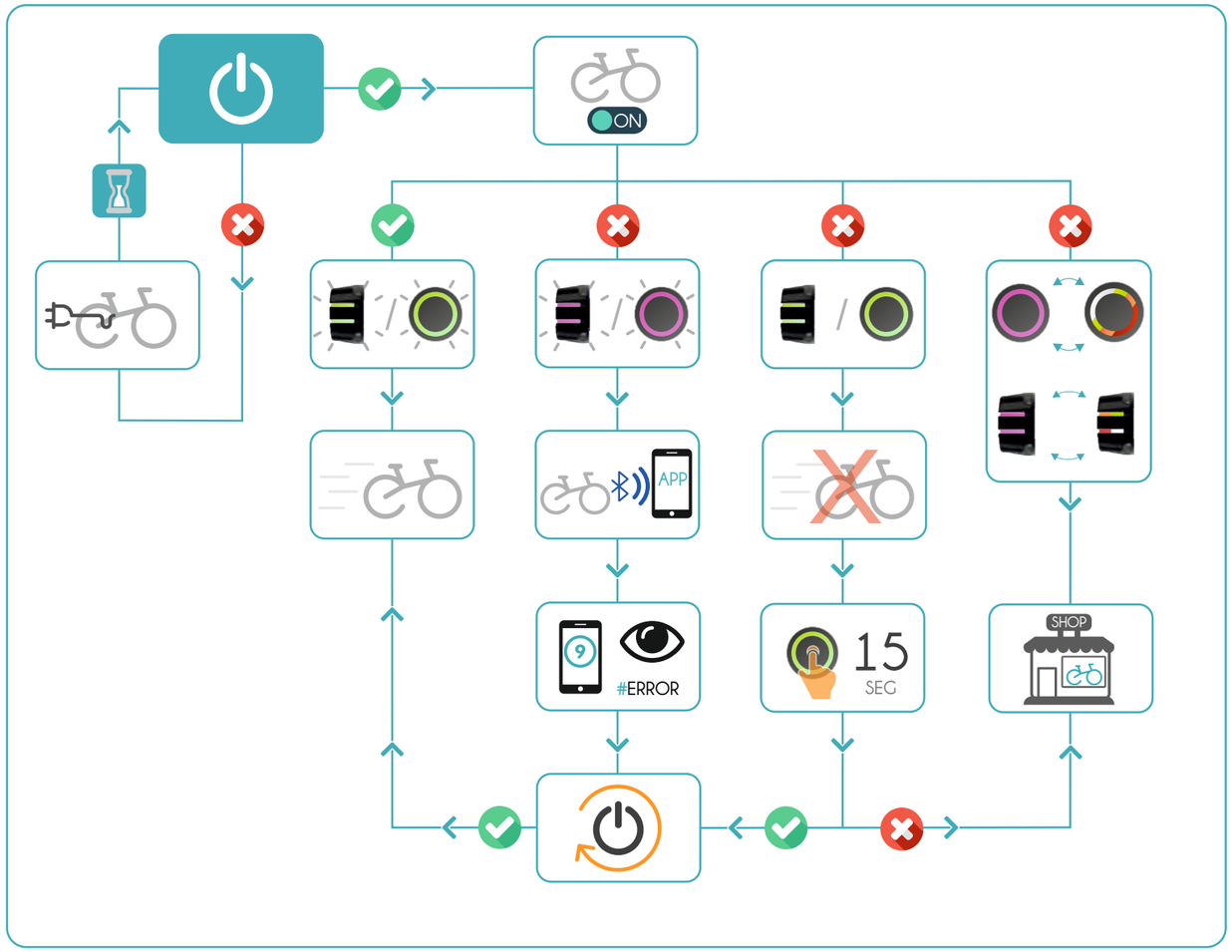
ON
APP
#ERROR
15
SEG
SHOP

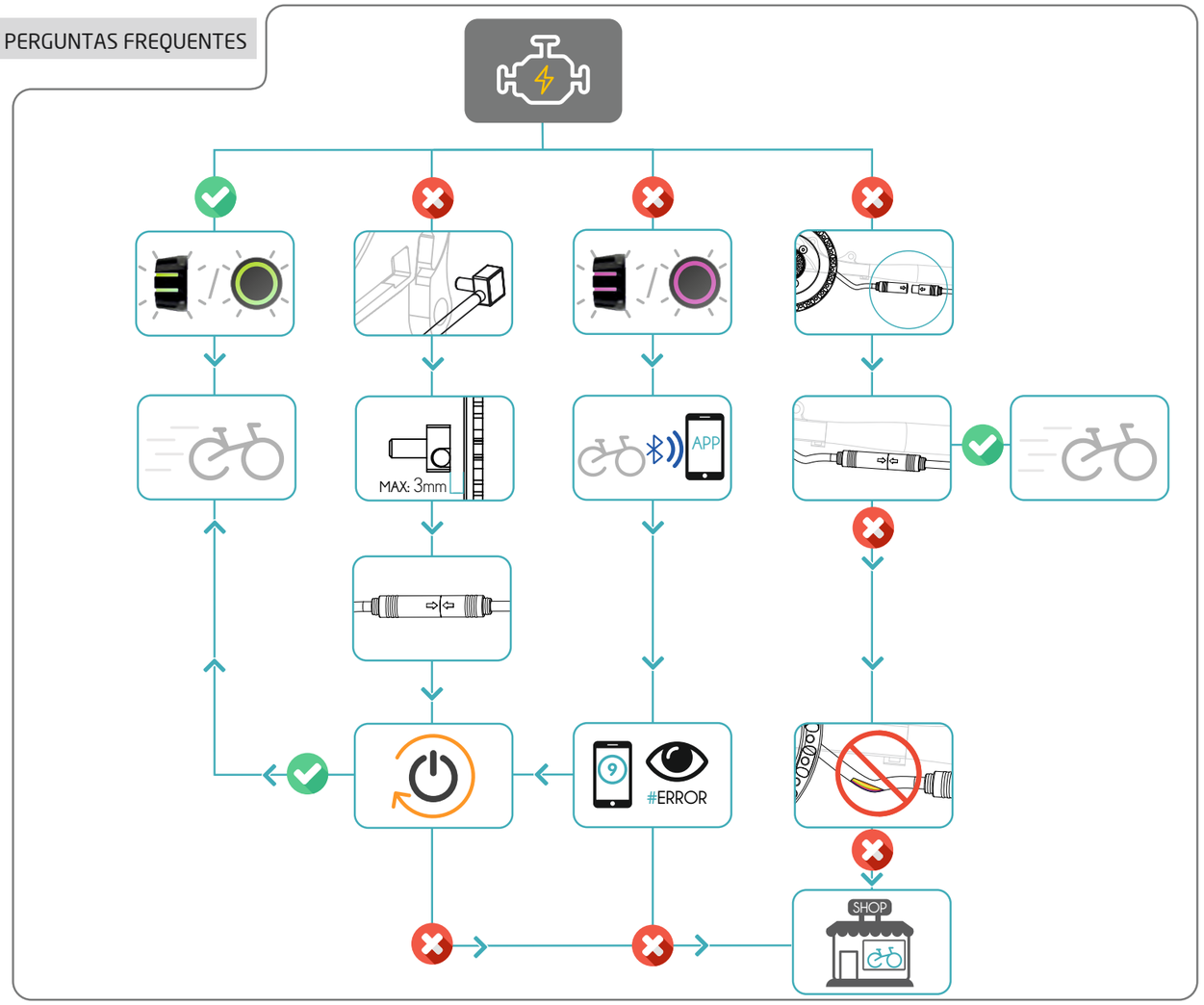
MAX: 3mm
APP
#ERROR
SHOP

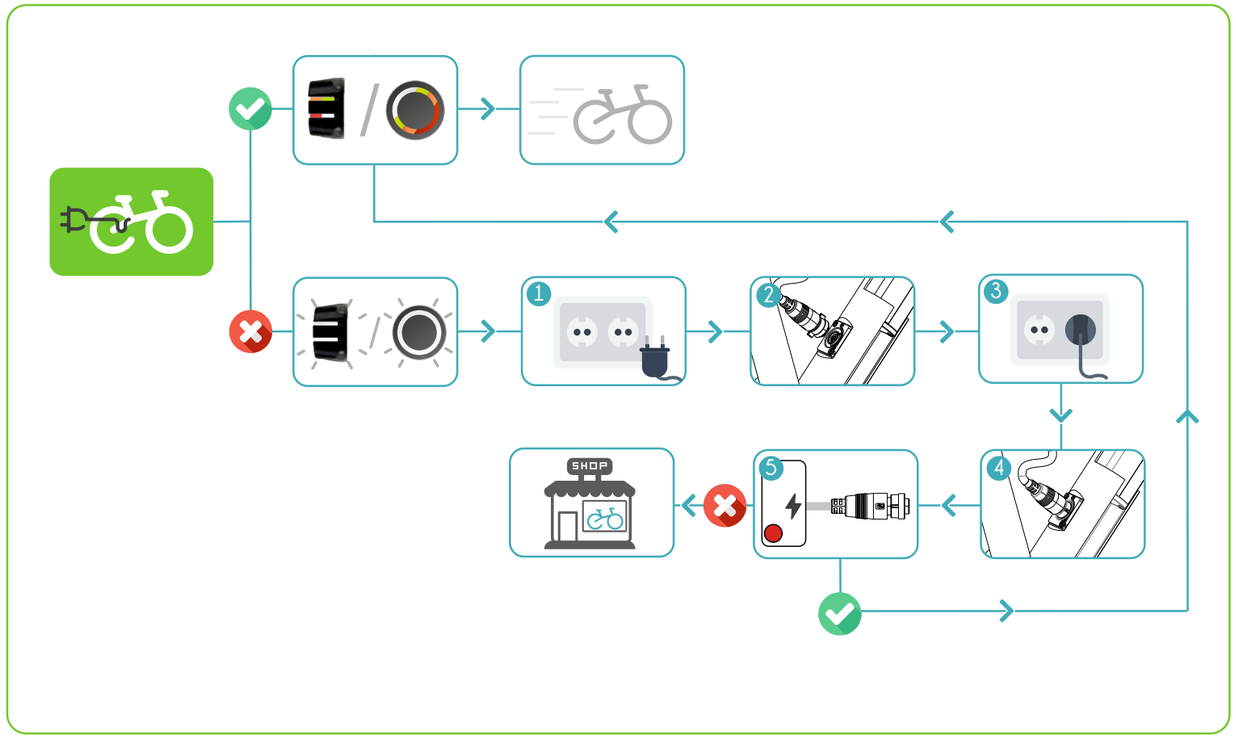
1
2
3
4
5
SHOP

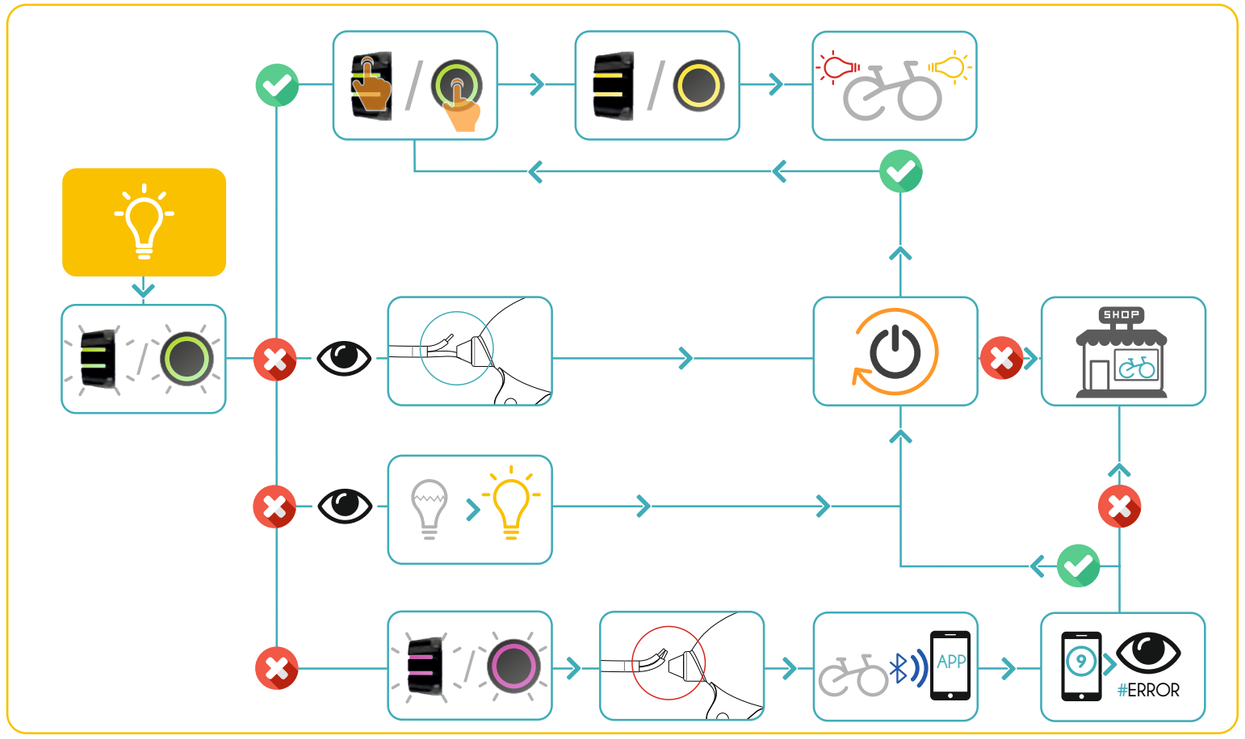
SHOP
APP
#ERROR